A1

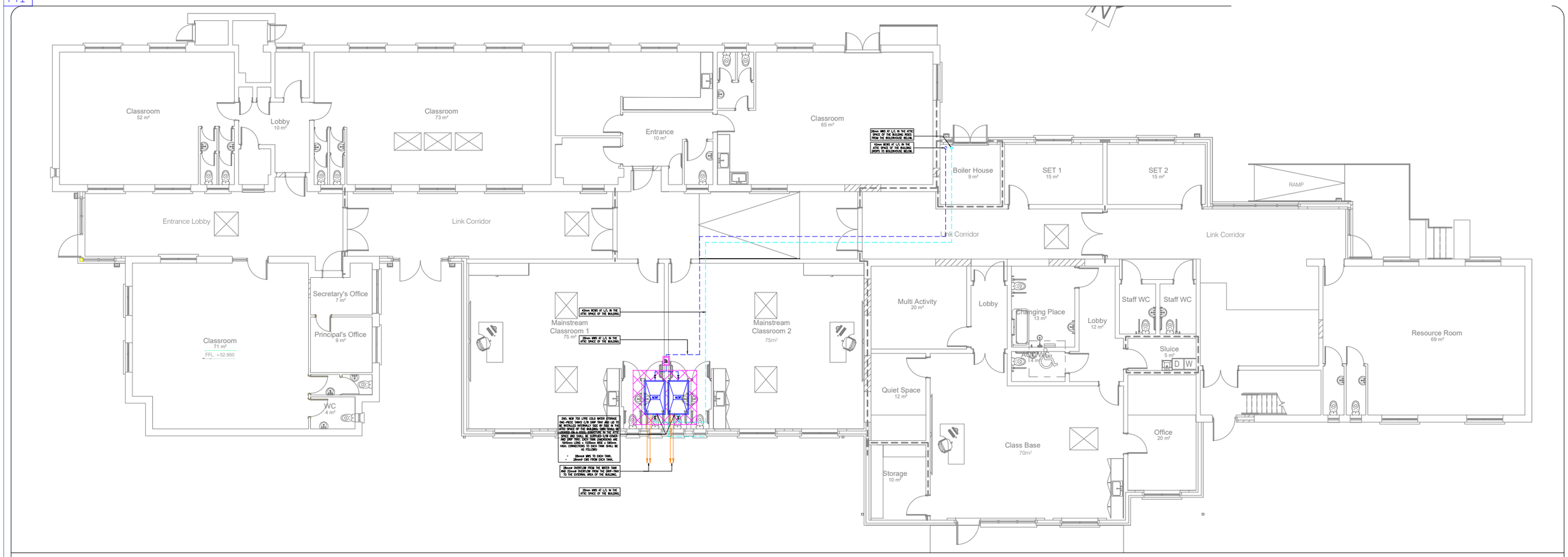

WATER SERVICES LAYOUT ATTIC SPACE (SCALE 1:100)

WATER SYMBOLS

1. 15mm CWS TO WC. PIPEWORK SHALL BE CONCEALED WITHIN THE FURNITURE/CEILING/WALL THROUGHOUT.
2. 15mm CWS, 15mm HWSF & 15mm HWSR TO WHB C/W THERMOSTATIC MIXING VALVE (TMV). PIPEWORK SHALL BE CONCEALED WITHIN THE FURNITURE/CEILING/WALL THROUGHOUT.
3. 15mm MWS, 15mm CWS, 15mm HWSF & 15mm HWSR TO SINK C/W THERMOSTATIC MIXING VALVE (TMV). PIPEWORK SHALL BE CONCEALED WITHIN THE FURNITURE/CEILING/WALL THROUGHOUT.
4. 15mm MWS, 15mm CWS, 15mm HWSF & 15mm HWSR TO SINK. PIPEWORK SHALL BE CONCEALED WITHIN THE FURNITURE/CEILING/WALL THROUGHOUT.
5. 15mm CWS TO KITCHEN APPLIANCE. PIPEWORK SHALL BE CONCEALED WITHIN THE FURNITURE/CEILING/WALL THROUGHOUT.
6. BOOSTER PUMP INSTALLED IN THE CEILING TO BOOST THE WATER SERVICES THROUGHOUT.
7. NEW COLD WATER STORAGE TANK INSTALLED IN THE CEILING VOID OF THE BUILDING. DISCUSS WITH STRUCTURAL ENGINEER FOR SUPPORTS.
8. 22mm MAINS WATER SUPPLY CONNECTING TO THE EXPANSION VESSEL.
9. NEW HOT WATER CYLINDER INSTALLED IN THE BOILERHOUSE OF THE BUILDING.
10. 22mm COLD WATER SUPPLY CONNECTING TO THE ELECTRIC SHOWER.

BP* — BOOSTER PUMP INSTALLED IN THE BUILDING (* DENOTES NUMBER OF PUMP)

CWT.* — COLD WATER STORAGE TANK INSTALLED IN THE BUILDING (* DENOTES NUMBER OF TANK)

ES — ELECTRIC SHOWER

SURFACE RUN PIPEWORK

DROP/RISE IN PIPEWORK

PIPEWORK AT HIGH LEVEL ABOVE CEILING (NONVISIBLE)

PIPEWORK AT HIGH LEVEL EXPOSED (VISIBLE)

ISOLATION VALVE

TMV — THERMOSTATIC MIXING VALVE FOR WHB AND SINKS

WC	WATER CLOSET
T.B.	TO BELOW
T.A.	TO ABOVE
L/L	LOW LEVEL
U/G	UNDER GROUND
MWS	MAINS WATER SERVICE
WHB	WASH HAND BASIN
F.B.	FROM BELOW
F.A.	FROM ABOVE
H/L	HIGH LEVEL
CWS	COLD WATER SUPPLY
HWSF	HOT WATER SERVICE FLOW
HWSR	HOT WATER SERVICE RETURN

A — PORTABLE FIRE EXTINGUISHER FOAM (6 LITRE)

B — PORTABLE FIRE EXTINGUISHER CARBON DIOXIDE (2KG)

C — PORTABLE FIRE EXTINGUISHER DRY POWDER (5KG)

FB — FIRE BLANKET

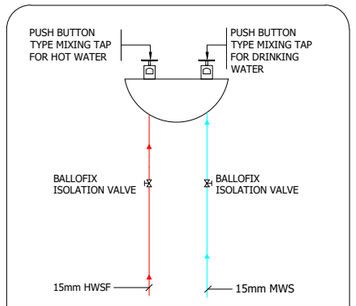

DETAIL FOR SLUICE SINK WITH TWO TAPS (1no FOR HOT WATER & 1no FOR DRINKING WATER

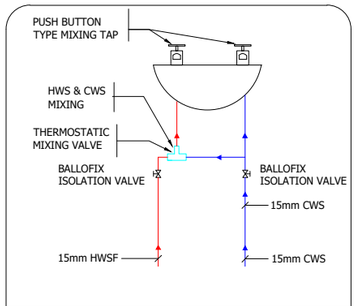

THERMOSTATIC MIXING VALVE DETAIL FOR WASH HAND BASINS WITH TWO TAPS

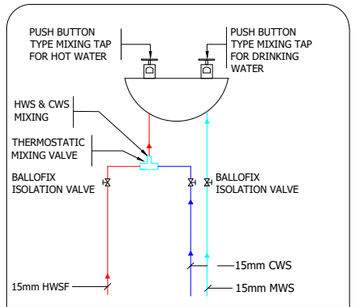

THERMOSTATIC MIXING VALVE DETAIL FOR SINK WITH TWO TAPS (1no FOR HOT WATER & 1no FOR DRINKING WATER

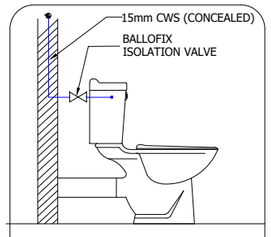

TYPICAL CONNECTION TO ASD UNIT WC

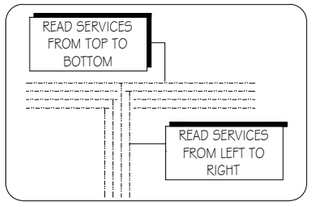

THE CONTRACTOR SHALL ALLOW FOR THE FOLLOWING CONNECTIONS TO ALL APPLIANCES WITHIN THE BUILDING WHETHER INDICATED OR NOT. IN GENERAL, THE CONTRACTOR SHALL ALLOW FOR THE FOLLOWING CONNECTIONS TO THE FOLLOWING APPLIANCES:

WHB	–	15mm CWS, 15mm HWSF & 15mm HWSR C/W THERMOSTATIC MIXING VALVE (TMV).
SINK	–	15mm MWS TO WHB, 15mm CWS, 15mm HWSF & 15mm HWSF TO SINK C/W THERMOSTATIC MIXING VALVE (TMV).
WC	–	15mm CWS TO WC
SLUICE SINK	–	15mm MWS TO WHB, 15mm CWS, 15mm HWSF & 15mm HWSF TO SINK.
DISHWASHER	–	15mm CWS TO DISHWASHER
WASHING MACHINE	–	15mm CWS TO WASHING MACHINE
SHOWER	–	22mm CWS TO SHOWER

NOTE: ALL COLD WATER SERVICES THROUGHOUT THE BUILDING SHALL BE A BOOSTED SYSTEM FROM THE NEW BOOSTER SET IN THE ATTIC SPACE OF THE BUILDING.

GENERAL NOTES:

1. THIS DRAWING IS TO BE READ IN CONJUNCTION WITH ALL MECHANICAL, ELECTRICAL, ARCHITECTURAL AND STRUCTURAL DRAWINGS & SPECIFICATIONS.
2. THE CONTRACTOR SHALL CO-ORDINATE FULLY WITH ALL OTHER TRADES BEFORE COMMENCING WORK. THE MECHANICAL CONTRACTOR SHALL BE RESPONSIBLE FOR PROVIDING ALL THE NECESSARY INFORMATION TO ALLOW THE MAIN CONTRACTOR CO-ORDINATE ALL SERVICES.
3. THE MECHANICAL CONTRACTOR SHALL ALLOW FOR CO-ORDINTATING THE MECHANICAL INSTALLATION WITH THE ELECTRICAL CONTRACTOR ON SITE. EXTRA COSTS INCURRED DUE TO THE CO-ORDINATION EXERCISE NOT BEING COMPLETED WILL NOT BE ACCEPTED BY THE ENGINEER.
4. DO NOT SCALE THIS DRAWING. ALL DIMENSIONS TO BE TAKEN ON SITE.
5. THE CONTRACTOR SHALL ALLOW FOR THE SUPPLY AND INSTALLATION OF ALL MECHANICAL SERVICES INDICATED ON THIS DRAWING.
6. THE CONTRACTOR SHALL BE RESPONSIBLE TO IDENTIFY SUITABLE FINAL ROUTES FOR PIPEWORK, MECHANICAL SERVICES, ETC. AS INDICATED ON THE DRAWINGS.
7. NEW MAINS RUN OF MECHANICAL PIPEWORK SHALL BE INSTALLED IN THE AREAS AS INDICATED. THIS IS INDICATIVE ONLY AND IF THE CONTRACTOR FINDS A MORE CONVENIENT ROUTE FOR THE MECHANICAL SERVICES ON SITE THEN THAT WILL BE ACCEPTABLE.
8. FINAL LOCATION OF ALL ITEMS OF PLANT/EQUIPMENT/PIPEWORK, ETC. SHALL BE AGREED ON SITE WITH THE EMPLOYERS REPRESENTATIVE AND THE CLIENT.
9. ALL SERVICES THROUGH FIRE BARRIERS SHALL BE SLEEVED EACH SIDE OF THE BARRIER. THE MAIN CONTRACTOR SHALL ALLOW FOR FIRE PROOFING THE OPES AFTER SERVICES IS INSTALLED.
10. THE CONTRACTOR SHALL ALLOW FOR ALL NECESSARY LABOUR, WIRING AND ATTENDANCES IN COMPLETING ALL THE MECHANICAL WORKS AS INDICATED ON THE DRAWINGS AND SPECIFICATIONS.

HEATING SERVICES NOTES:

11. PROVIDE BALL-O-FIX VALVES ON ALL FINAL CONNECTIONS TO FITTINGS. VALVES SHALL BE PROVIDED IN AN ACCESSIBLE LOCATION ON ALL INTERNAL WATER SERVICES OUTLETS WITHIN 1 METER OF THE FINAL CONNECTION. BALL-O-FIX VALVES FOR EXTERNAL TAPS SHALL BE FITTED INTERNALLY WITH EASY ACCESS.
12. DEAD LEG DISTRIBUTION PIPEWORK SHALL BE IN ACCORDANCE WITH CURRENT STANDARDS AND IS:EN 805:2000. CONNECT HWSR TO HWS WITHIN 500mm OF ALL OUTLETS.
13. ALL SANITARY WARE & TMV's TO BE TMV3 DOB COMPLIANT. ALL HOT WATER OUTLETS SHALL BE PROVIDED WITH FAIL-SAFE LOCKABLE THERMOSTATIC BLENDING VALVES LIMITING MAXIMUM TEMPERATURE TO 43°c. BACK-TO-BACK OR GROUPS OF WASH HAND BASINS SHALL BE SERVED BY A SINGLE BLENDING VALVE. ALL THERMOSTATIC BLENDING VALVES ON THE HOT WATER SERVICES ARE TO BE CONNECTED TO THE COLD WATER DISTRIBUTION SERVICE.
14. ALL NEW WATER SERVICES PIPEWORK SHALL BE COPPER.
15. ALL EQUIPMENT & SINKS SHALL BE SUPPLIED FREE ISSUE BY OTHER. THE MECHANICAL CONTRACTOR SHALL ALLOW FOR THE FITTING, INSTALLATION AND CONNECTION TO ALL THE UNITS.
16. ALL WATER SERVICES PIPEWORK IN THE CEILING VOID, ABOVE THE CEILING, IN VOIDS, CHASED IN WALLS, ETC. SHALL BE INSULATED AS DESCRIBED IN THE SPECIFICATIONS. IT IS NOT REQUIRED TO INSULATED THE SURFACE MOUNTED PIPEWORK BELOW CEILING LEVEL. ALL HIGH LEVEL PIPEWORK SHALL BE INSTALLED ABOVE THE CEILING AND ALL LOW LEVEL PIPEWORK SHALL BE INSTALLED IN VOIDS OR BOX-OUTS.
17. AUTOMATIC AIR VENTS TO BE FITTED AT ALL HIGH POINTS THROUGHOUT THE PIPEWORK SYSTEM. DRAIN COCKS TO BE FITTED AT ALL LOW POINTS THROUGHOUT THE SYSTEM.
18. ALL PIPEWORK WITHIN THE ATTICS, CONSEALED IN WALLS, PLANT ROOMS & CEILING VOIDS SHALL BE INSULATED AS PER THE TENDER SPECIFICATION.
19. FINAL LOCATION OF ALL SERVICES SHALL BE AGREED WITH THE CLIENT ON-SITE.
20. THE MECHANICAL CONTRACTOR SHALL BE RESPONSIBLE FOR PROVIDING ALL THE NECESSARY INFORMATION TO ALLOW THE MAIN CONTRACTOR TO CO-ORDINATE THE SERVICES.
21. ALL WATER SERVICES PIPEWORK WITHIN THE ASD UNIT SHALL BE CONSEALED WITHIN WALLS & CEILINGS. IN ANY LOCATION THAT IT CANT BE CONSEALED, ANOTHER APPROACH WILL HAVE TO BE CONSIDERED I.E. BOXING OUT PIPEWORK.
22. ALL COLD WATER SERVICES THROUGHOUT THE BUILDING SHALL BE A BOOSTED SUPPLY FROM THE NEW BOOSTER SYSTEM LOCATION IN THE ATTIC SPACE IN THE NEW EXTENSION.
23. ALL DIMENSIONS INDICATED IN mm SHALL REPRESENT mm DIAMETER FOR ALL WATER SERVICES PIPEWORK.

REV	DATE	PREPARED BY/PROJECT ENGINEER	QUALITY CHECK BY:
T1	21.07.26	R. WHYTE	G. BENNDORF

M&E CONSULTANT

GALILEO ENERGY SERVICES
UNIT A6, M4 BUSINESS PARK, MAYNOOTH ROAD, CELBRIDGE, CO. KILDARE.
Tel: 01-6274103
www.galileoenergy.ie

Copyright©

Drawing Status
TENDER

Job Title
NUNS CROSS N.S,
ASHFORD,
CO. WICKLOW.

Drawing Title
WATER SERVICES
LAYOUT ATTIC SPACE

Architect MCLOUGHLIN ARCHITCTURE
Unit 4B, Elm House
Millennium Park, Naas
Co.Kildare, Ireland
Tel. 045 854 900

Scale:	Drawn By:	
1:100 @ A1	ROBERT WHYTE	
Job No. 22-053	Drawing No. 53(M002)	Rev. T1